Cheese Cutting & Packaging Equipment Solutions for the Artisan

HART DESIGN & MANUFACTURING

Booth #341

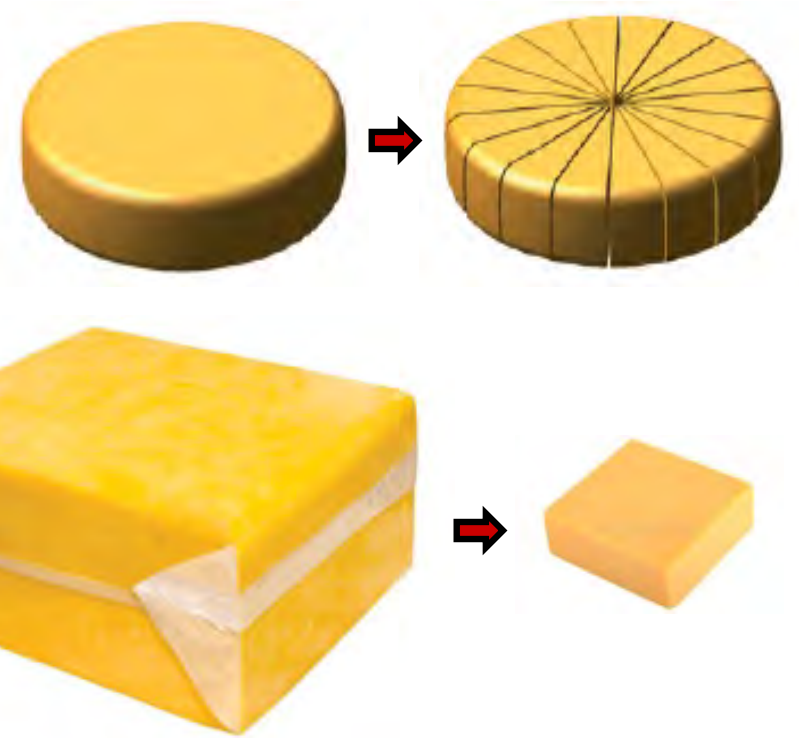

Marty Juneau

m_juneau@hartdesign.com

Dairy Process Consultant

Hart Design & Manufacturing, Inc.

1940 Radisson Street

Green Bay, WI 54302

hartdesign.com

https://store.hartdesign.com/

https://www.facebook.com/HARTDesignManufacturing

https://twitter.com/HARTDesignMfg

https://www.linkedin.com/company/hart-design-&-mfg-inc-?trk=top_nav_home

https://www.youtube.com/channel/UCcWk_n6EECXXR6EMIDAnZPg/videos

Cheese Cutting & Packaging Equipment Solutions for the Artisan

Section #1 - Fixed size wedge cutting

Section #2 - Exact size wedge cutting

Section #3 - Exact size wedge cutting with options

Section #4 - Disc cutting (wheel slabbing)

Section #5 - Core cutting & profiling

Section #6 - Fixed size block cutting (single stage cutting)

Section #7 - Fixed size block cutting (two stage cutting)

Section #8 - Inline Cutting & Packaging

Section #9 - Vacuum chamber packaging

Section #10 - Thermoformer packaging

HART
DESIGN & MANUFACTURING

Section #1 - Fixed size wedge cutting

HART
DESIGN & MANUFACTURING

Section #1 - Fixed size wedge cutting

HART
DESIGN & MANUFACTURING

Section #1 - Fixed size wedge cutting

HART
DESIGN & MANUFACTURING

Section #2 - Exact weight wedge cutting

HART
DESIGN & MANUFACTURING

Section #2 - Exact weight wedge cutting

HART
DESIGN & MANUFACTURING

Section #2 - Exact weight wedge cutting

HART
DESIGN & MANUFACTURING

Section #2 - Exact weight wedge cutting

Example: Wheel cutting accuracy

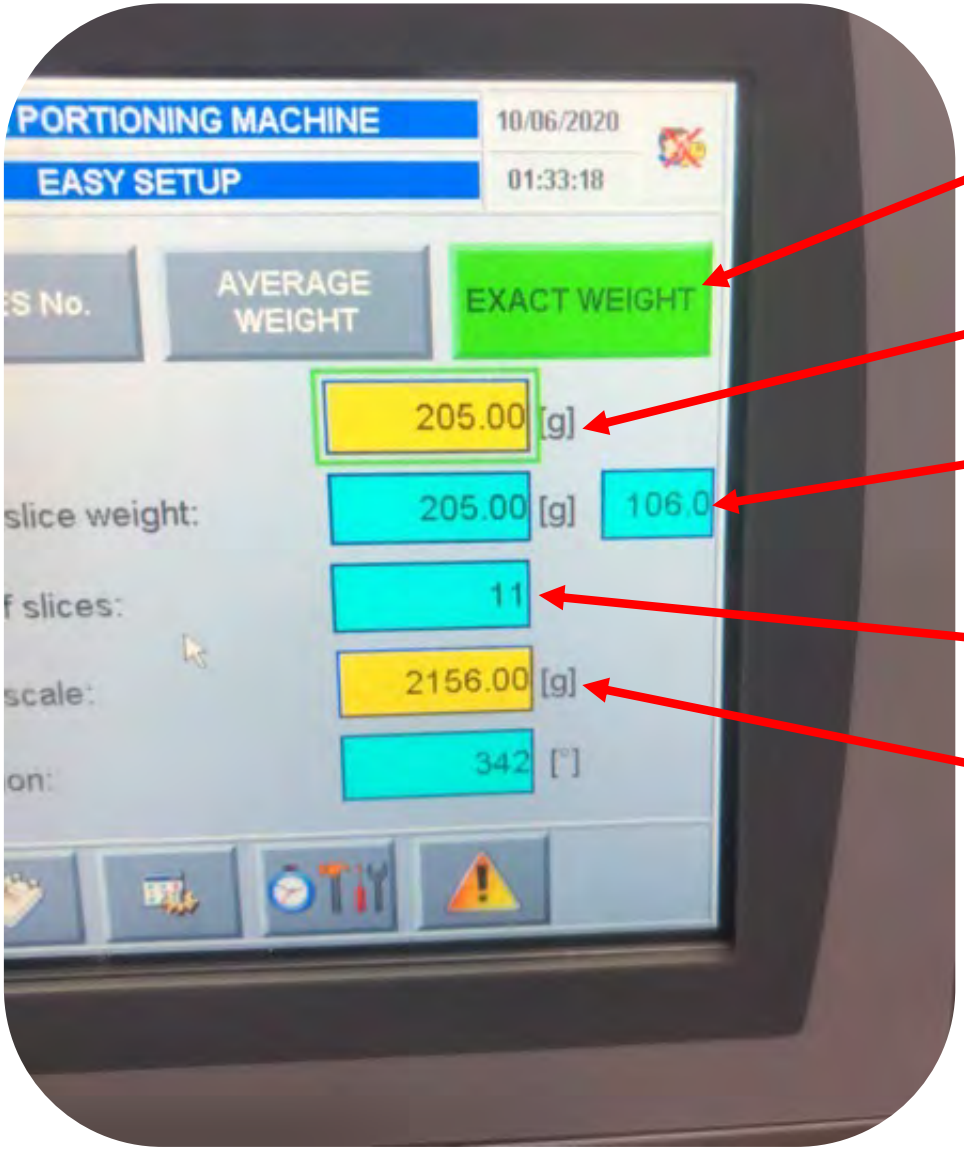

Program

Target weight

Trim piece

# of Wedges

Total weight

HART DESIGN & MANUFACTURING

Section #2 - Exact weight wedge cutting

HART
DESIGN & MANUFACTURING

Section #2 Exact weight wedge cutting

See wedges numbered #1 thru #11

HART DESIGN & MANUFACTURING

Section #2 - Exact weight wedge cutting

Example of Wheel cutting accuracy

Type of Cut	Trim cut: Yes/No	Target weight (grams)	Target weight (ounces)	Total wheel weight	Estimated trim wedge weight
Pie Cut	Yes	205	7.23	2156 grams / 76.05 oz.	106 grams / 3.74 oz.

Wedge #	weight (grams)	weight (ounces)
1st Wedge	204	7.20
2nd Wedge	206	7.27
3rd Wedge	208	7.34
4th Wedge	203	7.16
5th Wedge	206	7.27
6th Wedge	204	7.20
7th Wedge	205	7.23
8th Wedge	205	7.23
9th Wedge	205	7.23
10th Wedge	205	7.23
11th Wedge (trim)	102	3.60
Totals:	2153	75.94

Accuracy in Grams:
-2 grams / +3 grams

Accuracy in Ounces:
-.07 ounces / +.11 ounces

Section #3 - Exact weight cutters w/additional features

HART
DESIGN & MANUFACTURING

Section #3 - Exact weight cutters w/additional features

With auto-discharge
& take-away conveyor

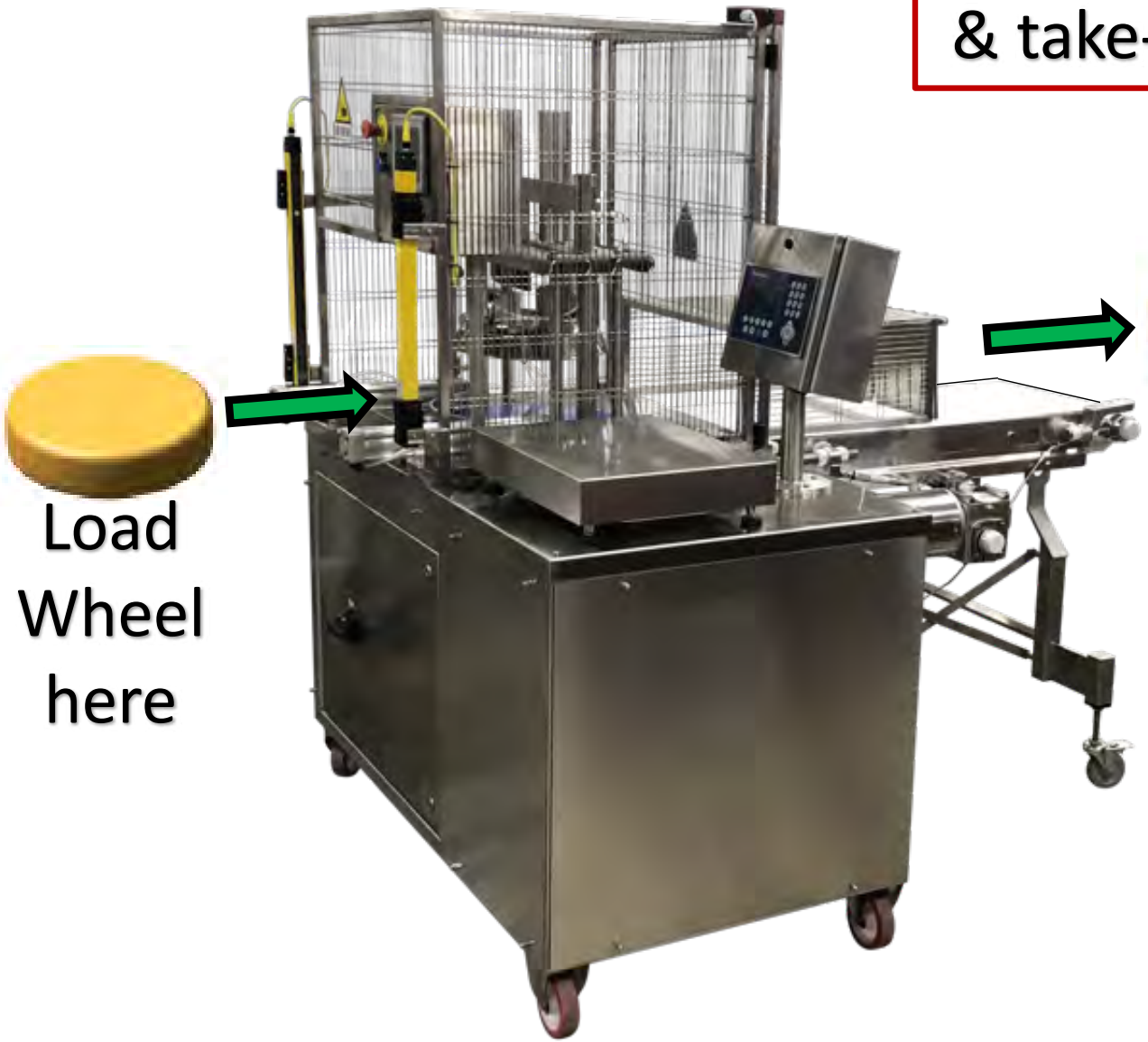

Load
Wheel
here

Wedges
automatically
ejected after
Cutting cycle

HART
DESIGN & MANUFACTURING

Section #3 - Exact weight cutters w/additional features

With auto-discharge & take-away conveyor

HART
DESIGN & MANUFACTURING

Section #3 - Exact weight cutters w/additional features

With auto-discharge
& take-away conveyor

HART
DESIGN & MANUFACTURING

Section #3 - Exact weight cutters w/additional features

Wheel is automatically ejected after it is cut into wedges

With auto-infeed conveyor
And auto-outfeed conveyor

HART
DESIGN & MANUFACTURING

Section #3 - Exact weight cutters w/additional features

With auto-infeed conveyor and auto-outfeed conveyor

HART
DESIGN & MANUFACTURING

Section #3 - Exact weight cutters w/additional features

HART
DESIGN & MANUFACTURING

With auto-infeed conveyor
And auto-outfeed conveyor

Section #3 - Exact weight cutters w/additional features

With core
Cutting station

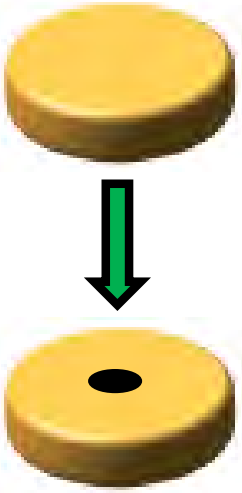

HART
DESIGN & MANUFACTURING

Section #3 - Exact weight cutters w/additional features

With core cutting station

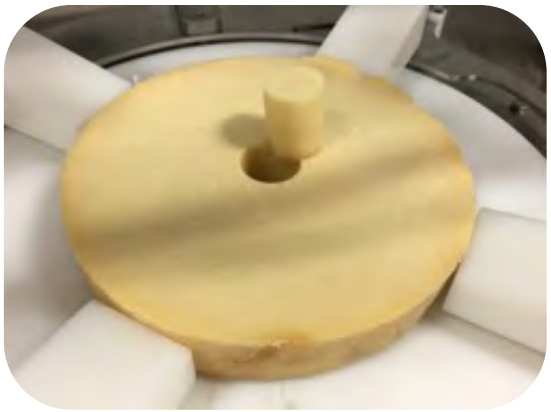

HART
DESIGN & MANUFACTURING

Section #3 - Exact weight cutters w/additional features

With core cutting station

HART
DESIGN & MANUFACTURING

Section #3 - Exact weight cutters w/additional features

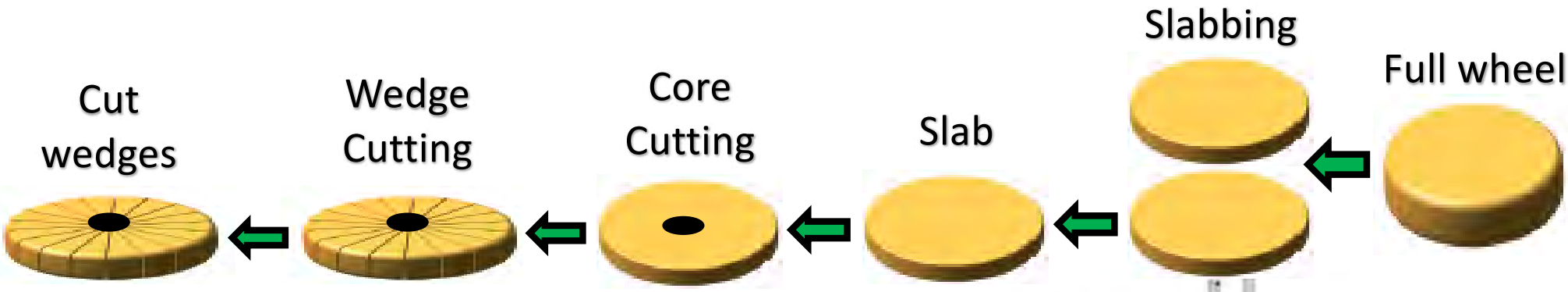

With Slabbing, core cutting and wedge cutting

HART DESIGN & MANUFACTURING

Section #3 - Exact weight cutters w/additional features

With Slabbing, core cutting and wedge cutting

Pie Cut

Cake Cut

HART
DESIGN & MANUFACTURING

Section #4 - Disc Cutting / Wheel Slabbing

Disc Cutting / Wheel Slabbing

HART
DESIGN & MANUFACTURING

Section #4 - Disc Cutting / Wheel Slabbing

HART
DESIGN & MANUFACTURING

Section #4 - Disc Cutting / Wheel Slabbing

HART
DESIGN & MANUFACTURING

Section #4 - Disc Cutting / Wheel Slabbing

HART
DESIGN & MANUFACTURING

Section #4 - Disc Cutting / Wheel Slabbing

HART
DESIGN & MANUFACTURING

Section #4 - Disc Cutting / Wheel Slabbing

Electronic Version

HART
DESIGN & MANUFACTURING

Section #4 - Disc Cutting / Wheel Slabbing

Electronic Version

HART
DESIGN & MANUFACTURING

Section #4 - Disc Cutting / Wheel Slabbing

Programmable
Version

HART
DESIGN & MANUFACTURING

Section #4 - Disc Cutting / Wheel Slabbing

Programmable
Version

HART
DESIGN & MANUFACTURING

Section #5 - Core Cutting / Profiling

HART
DESIGN & MANUFACTURING

Section #5 - Core Cutting / Profiling

HART
DESIGN & MANUFACTURING

Section #5 - Core Cutting / Profiling

HART
DESIGN & MANUFACTURING

Section #5 - Core Cutting / Profiling

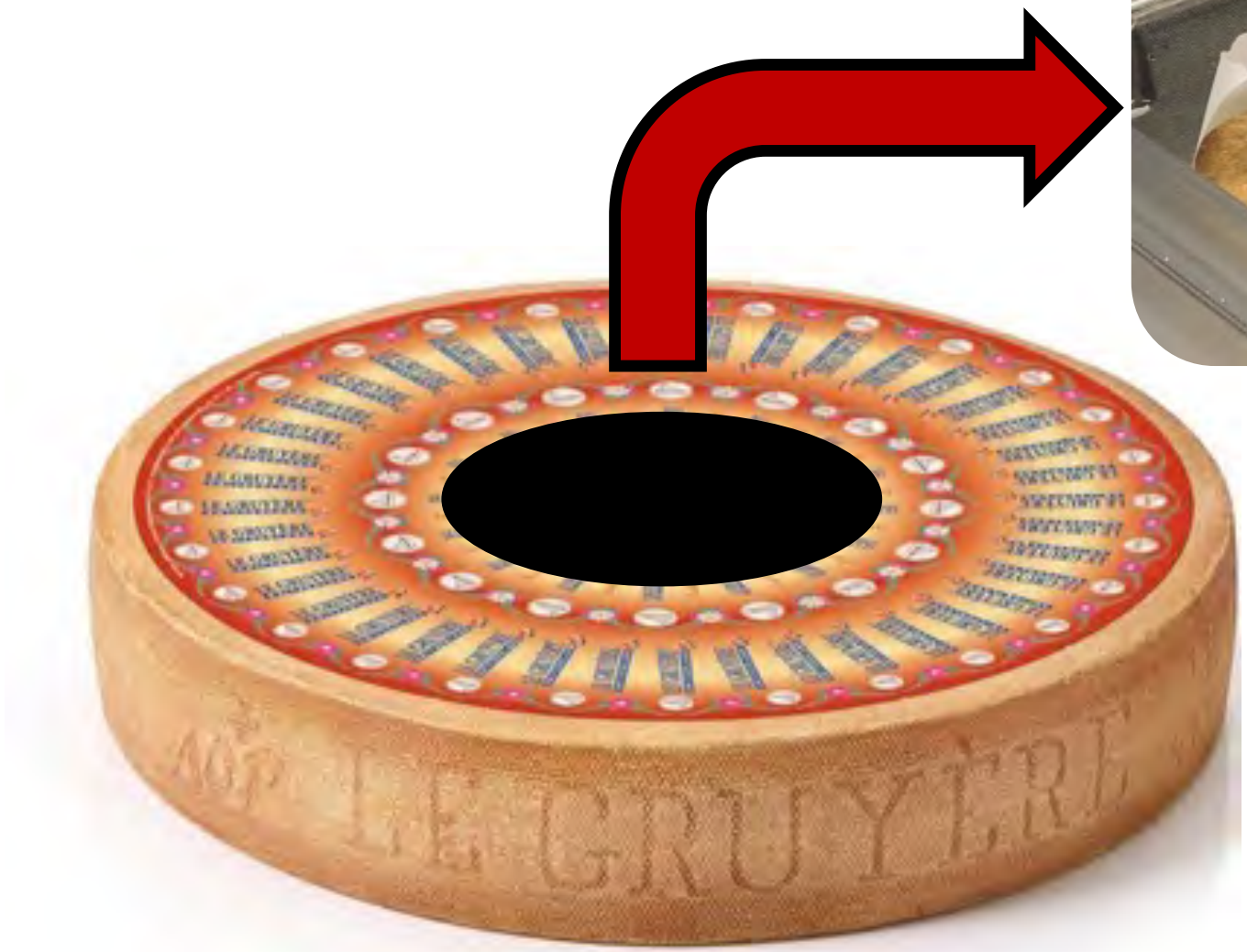

HART
DESIGN & MANUFACTURING

Section #6 - Fixed size block cutting (single stage)

Vertical cutter

Horizontal cutter

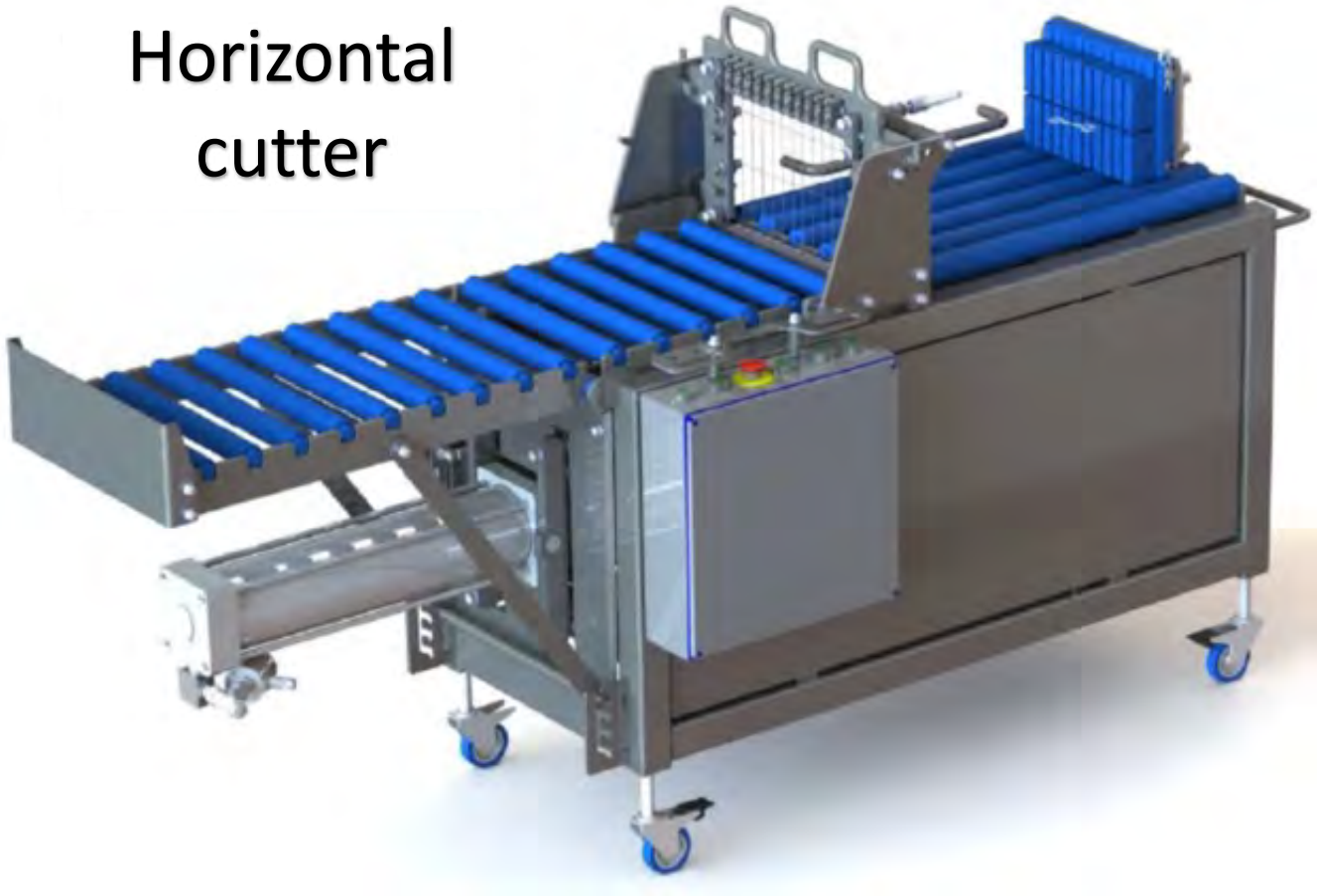

HART DESIGN & MANUFACTURING

Section #6 - Fixed size block cutting (single stage)

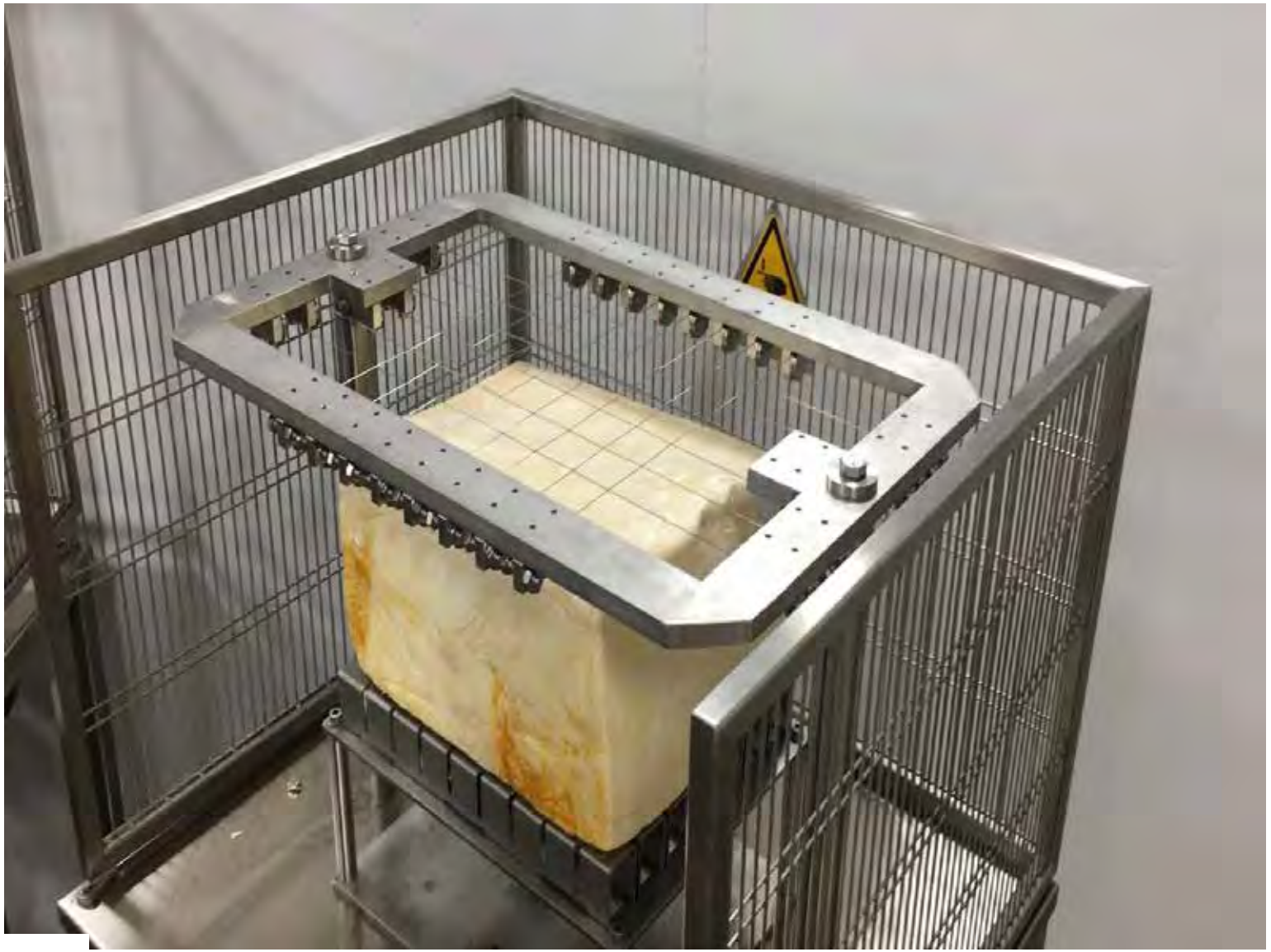

Vertical cutter

HART DESIGN & MANUFACTURING

Section #6 - Fixed size block cutting (single stage)

Vertical cutter

HART DESIGN & MANUFACTURING

Section #6 - Fixed size block cutting (single stage)

Horizontal cutter

HART DESIGN & MANUFACTURING

Section #6 - Fixed size block cutting (single stage)

Horizontal cutter

HART DESIGN & MANUFACTURING

Section #7 - Fixed size block cutting (two stage)

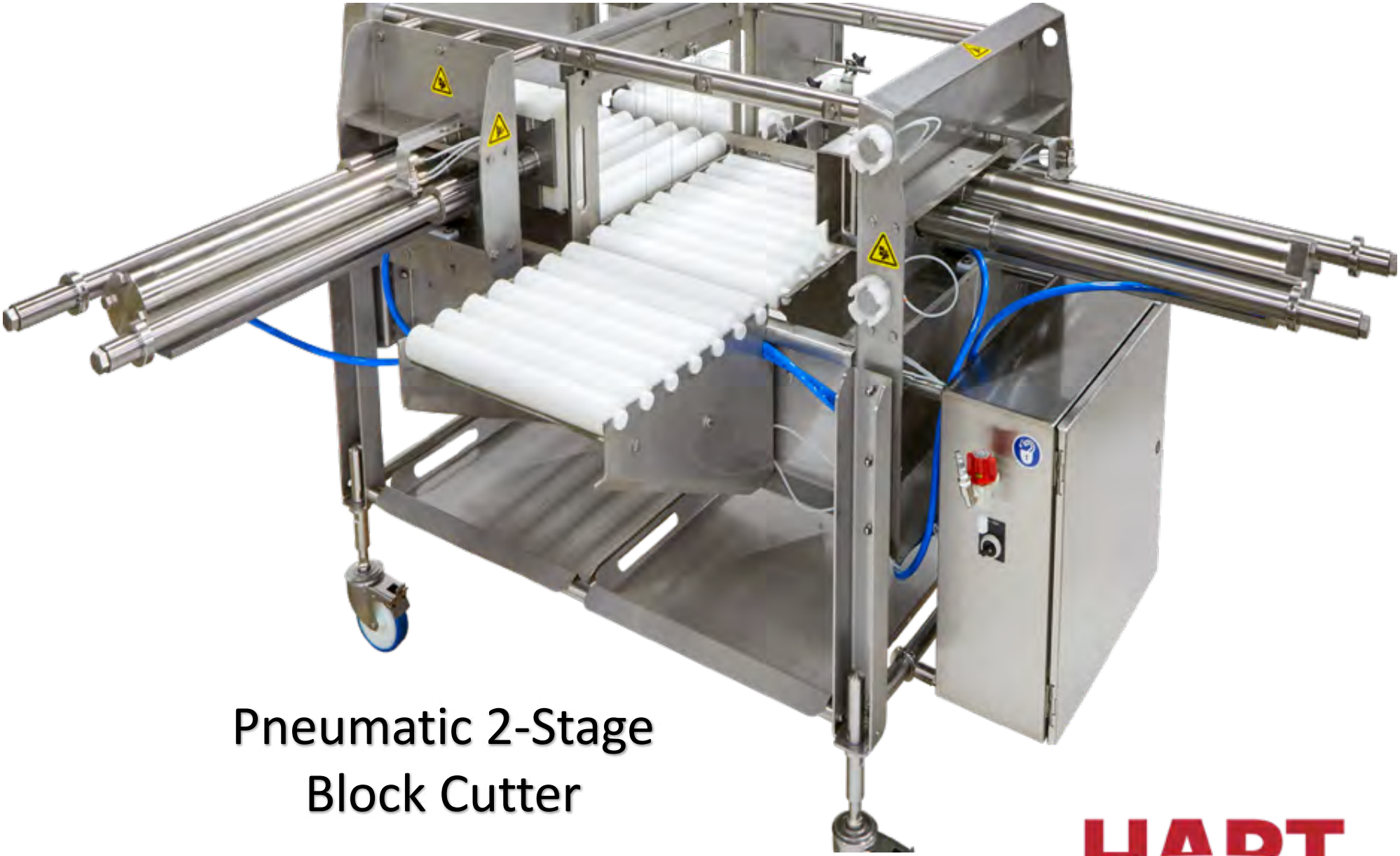

Pneumatic 2-Stage
Block Cutter

HART
DESIGN & MANUFACTURING

Section #7 - Fixed size block cutting (2-stage)

HART DESIGN & MANUFACTURING

Cutting 16 oz. chunks

Section #7 - Fixed size block cutting (two stage)

Example #1 - 8 oz. chunks

1st reduce the 7" X 11" X 14" Blocks into 5 lb. loaves that are (approx.) 3-½" X 3-½" X 11" Long
2nd reduction is to cut these loaves into (approx.) 1" thick / 8 oz. chunks

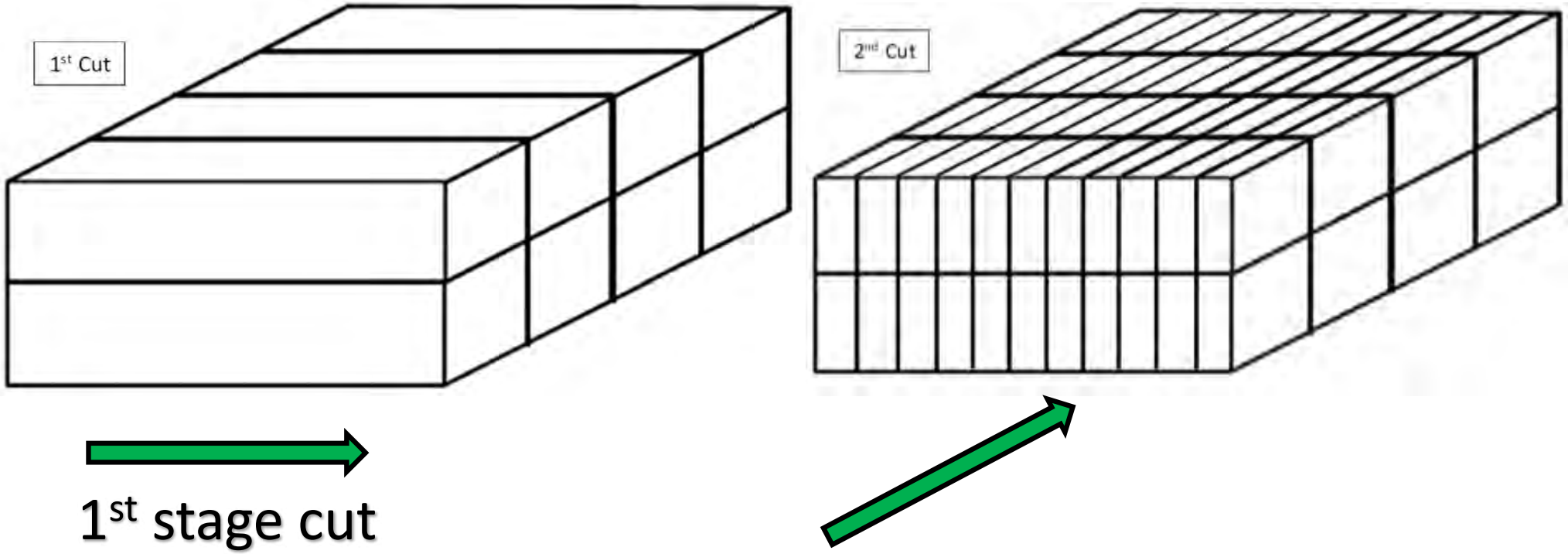

HART DESIGN & MANUFACTURING

Section #7 - Fixed size block cutting (two stage)

Example #2 - 16 oz. chunks

1st reduce the 7" X 11" X 14" Blocks into loaves that are (approx.) 2-¼" X 4-½" X 11" Long
2nd reduction is to cut these loaves into (approx.) 2-¾" thick / 16 oz. chunks

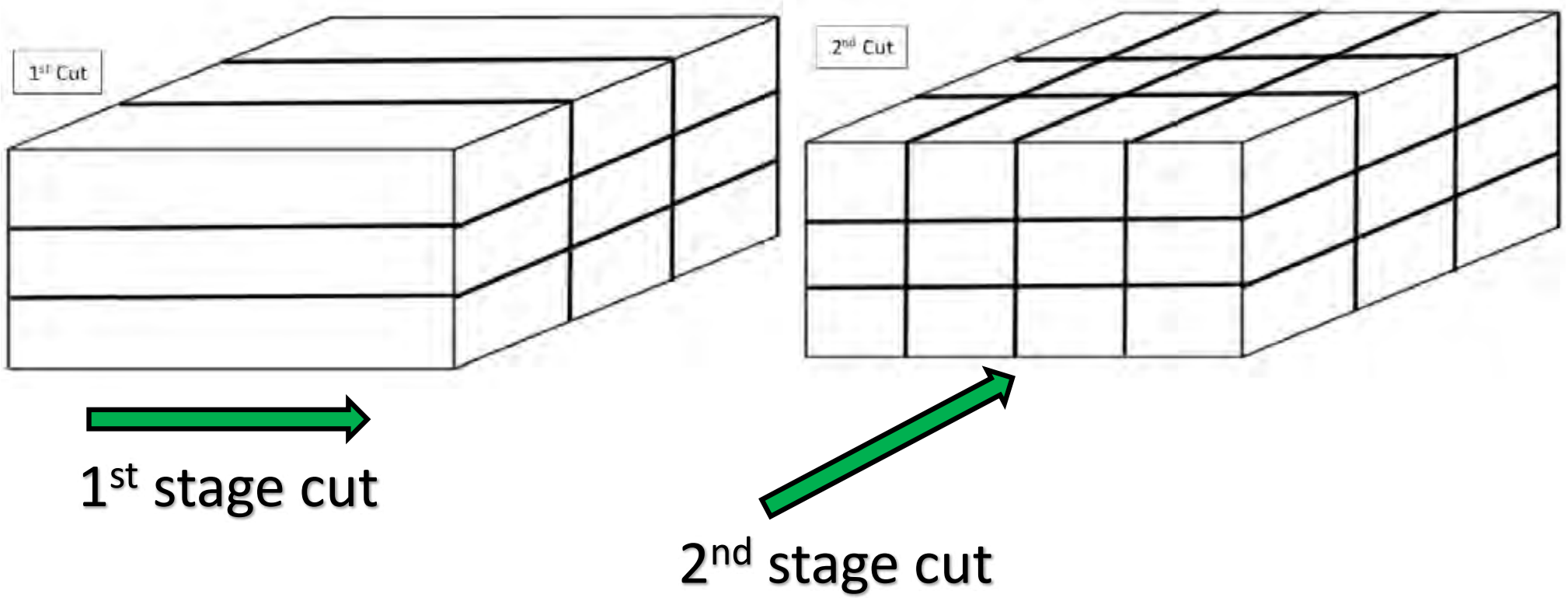

HART DESIGN & MANUFACTURING

Section #8 - Inline Cutting & Packaging

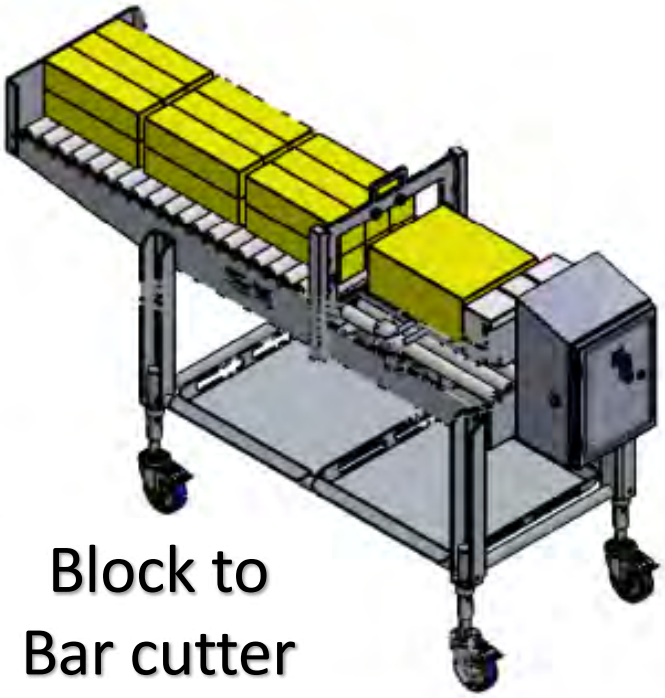

Block to
Bar cutter

Inline chunk
cutter

Flow wrapper

HART
DESIGN & MANUFACTURING

Section #8 - Inline Cutting & Packaging

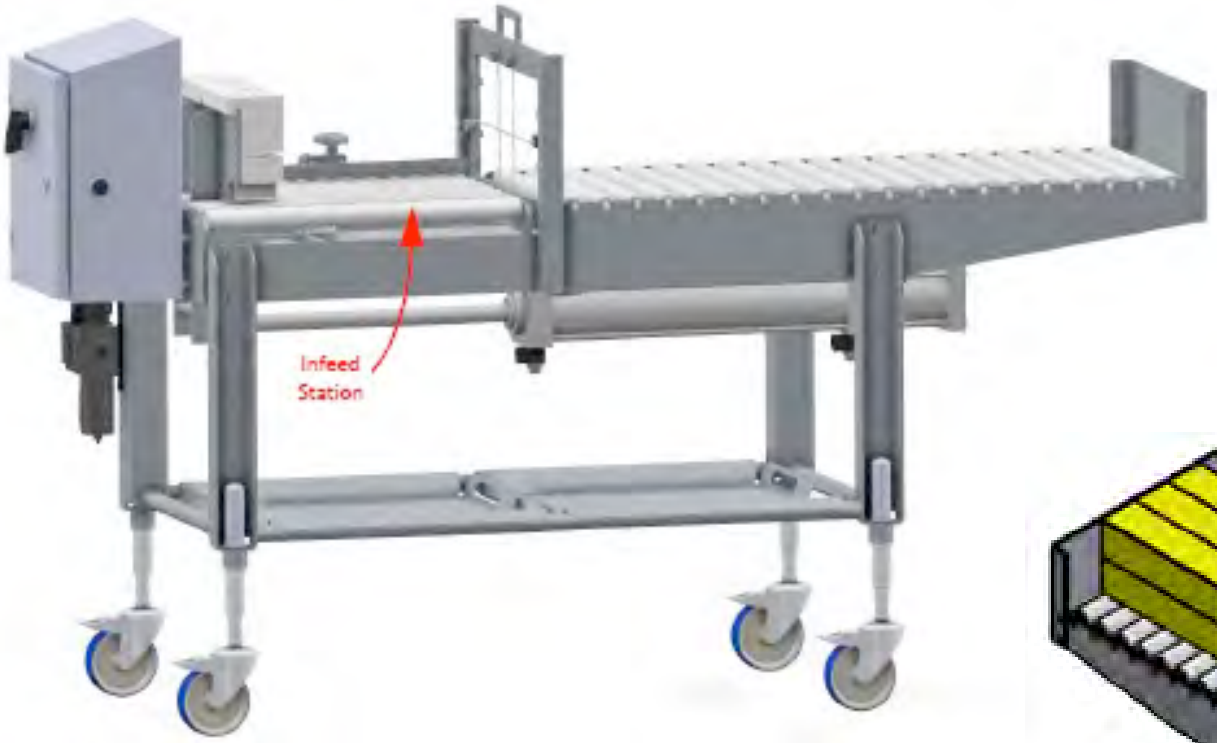

Block to
Bar cutter

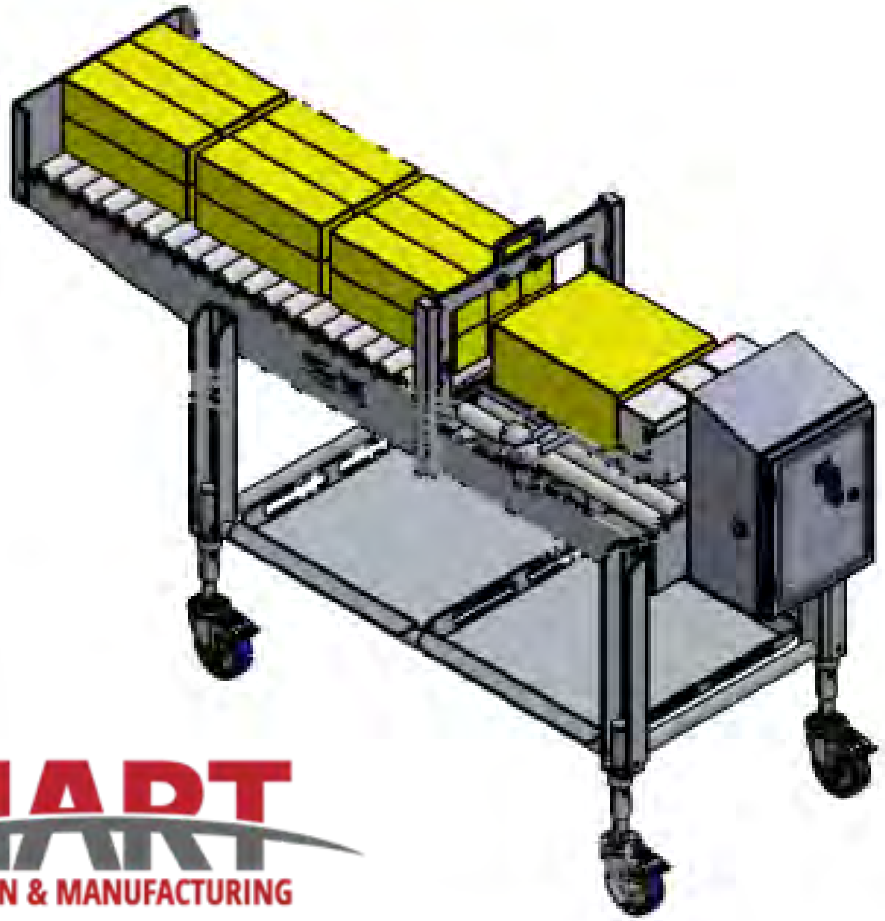

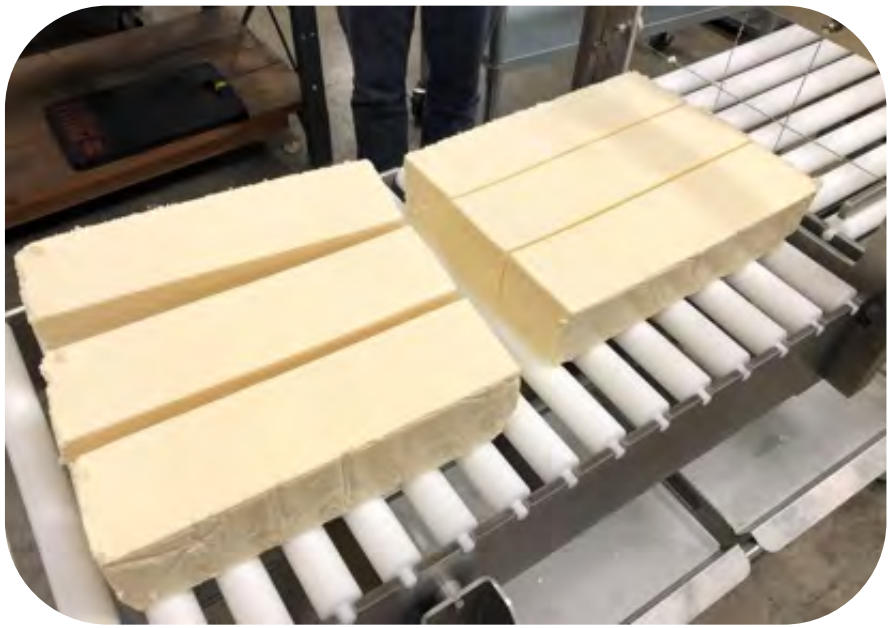

HART
DESIGN & MANUFACTURING

Section #8 - Inline Cutting & Packaging

HART
DESIGN & MANUFACTURING

Section #8 - Inline Cutting & Packaging

Flow wrapper

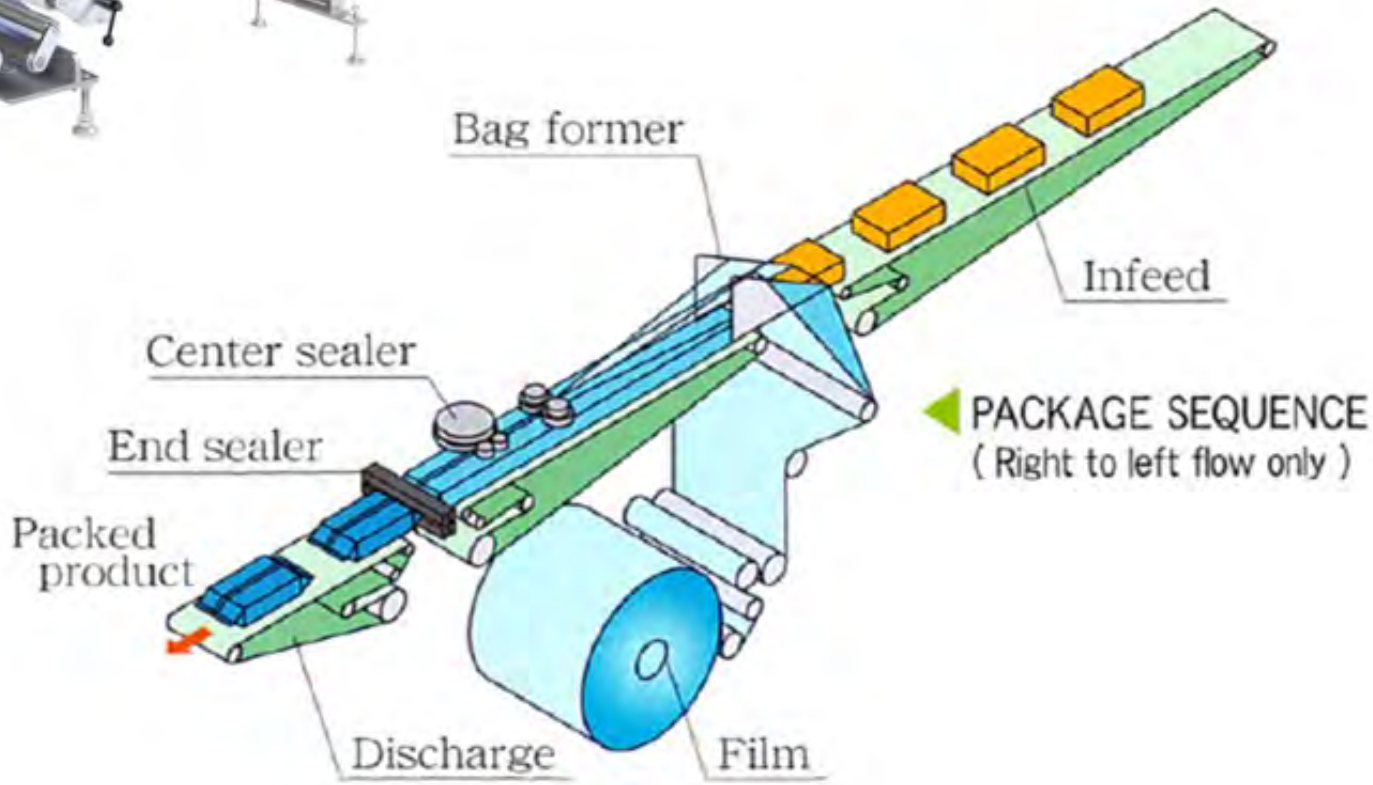

HART
DESIGN & MANUFACTURING

Section #8 - Inline Cutting & Packaging

Top view - clear film

Bottom view - clear film

HART
DESIGN & MANUFACTURING

White/clear film with labels

Top view

Bottom view

"Best by"
Data printer

HART
DESIGN & MANUFACTURING

Printed film with labels

Top view

Bottom view

HART
DESIGN & MANUFACTURING

Printed film with all Data

Top view

Bottom view

HART DESIGN & MANUFACTURING

Section #9 - Vacuum Chamber Packaging

Single chamber
Vacuum Sealer

Single chamber
Dip Tank

HART
DESIGN & MANUFACTURING

Section #9 - Vacuum Chamber Packaging

Single chamber vacuum packaging machine

Single chamber
Vacuum Sealer

Sealed Package

HART
DESIGN & MANUFACTURING

Section #9 - Vacuum Chamber Packaging

Shrink – Dip tank

Single chamber
Dip Tank

Package after dip tank

HART
DESIGN & MANUFACTURING

Section #9 - Vacuum Chamber Packaging

Double chamber vacuum packaging machine

Sealed package

HART DESIGN & MANUFACTURING

Shrink tunnel

Package after Shrink tunnel

HART DESIGN & MANUFACTURING

Double chamber vacuum packaging machine automatically feeding a shrink tunnel

HART
DESIGN & MANUFACTURING

Section #9 - Vacuum Chamber Packaging

Examples

HART DESIGN & MANUFACTURING

Section #10 - Thermoformer packaging

Thermoformer – horizontal form fill
And seal roll stock packaging machine

HART
DESIGN & MANUFACTURING

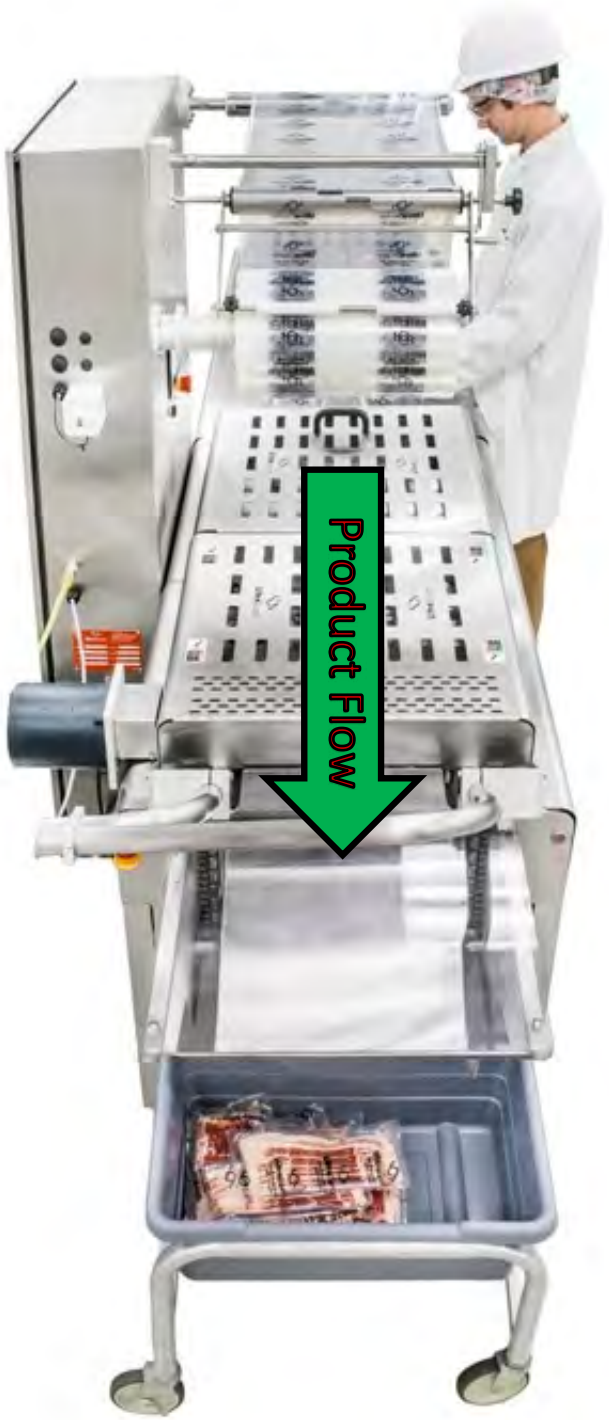

Thermoformer – horizontal form fill And seal roll stock packaging machine

HART
DESIGN & MANUFACTURING

Thermoformer – horizontal form fill And seal roll stock packaging machine

Examples

HART
DESIGN & MANUFACTURING

Cheese Cutting & Packaging
Equipment Solutions for the Artisan

HART
DESIGN & MANUFACTURING

Thank you for your time & attention

Marty Juneau

m_juneau@hartdesign.com

Dairy Process Consultant

Hart Design & Manufacturing, Inc.

1940 Radisson Street

Green Bay, WI 54302

Booth #341